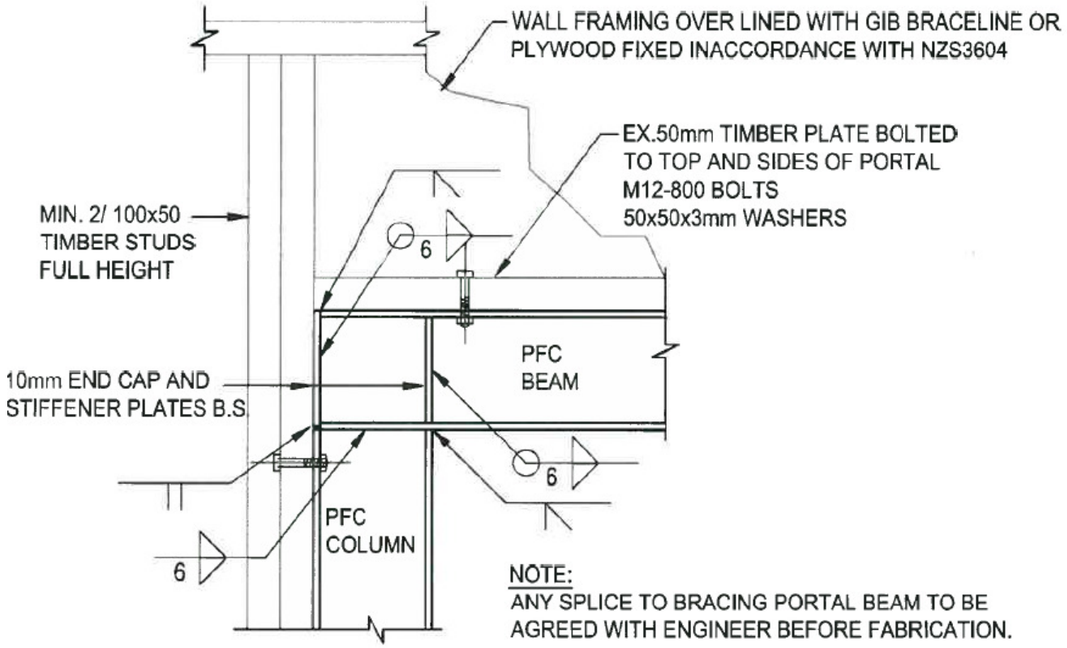

NOTE:
ANY SPLICE TO BRACING PORTAL BEAM TO BE
AGREED WITH ENGINEER BEFORE FABRICATION.

DETAIL D **A2.05** PFC KNEE JOINT
1:10

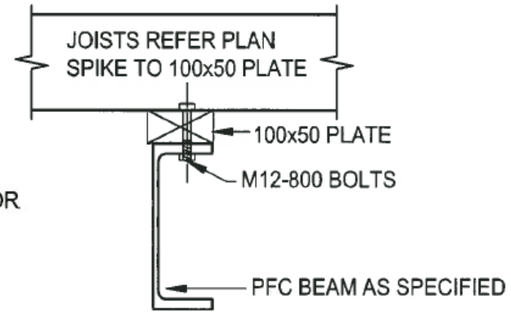

DETAIL 4. **A2.05**
1:10

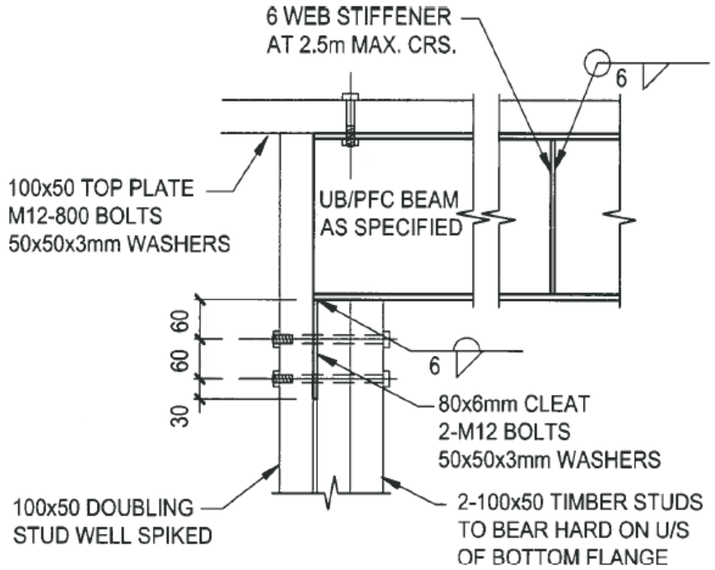

DETAIL B **A2.05**
1:10

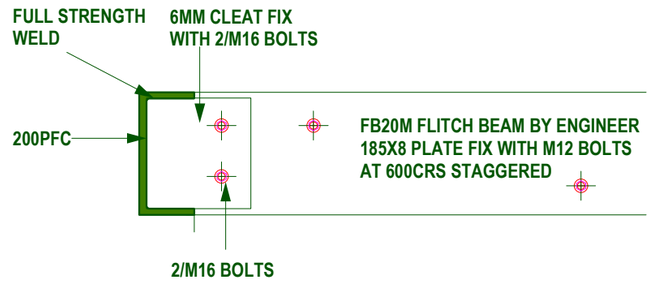

C **SK 3** **DETAIL**
Note

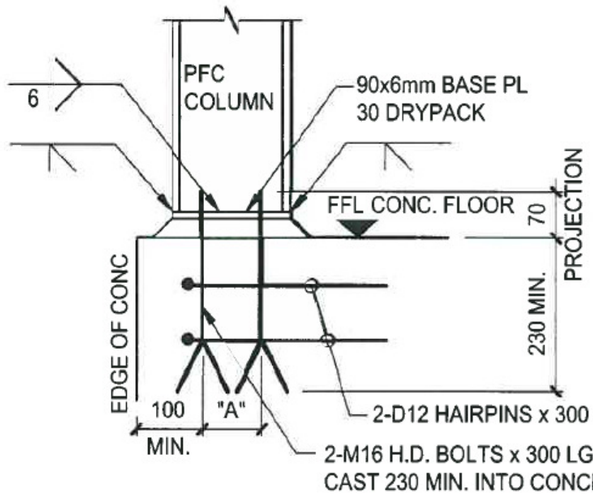

H.D. BOLT SPACING	
PFC	"A" (mm
150	70
180 / 200	90
230 / 250	140

DETAIL D. **A2.05** CONCRETE FLOOR BASE PLATE
1:10

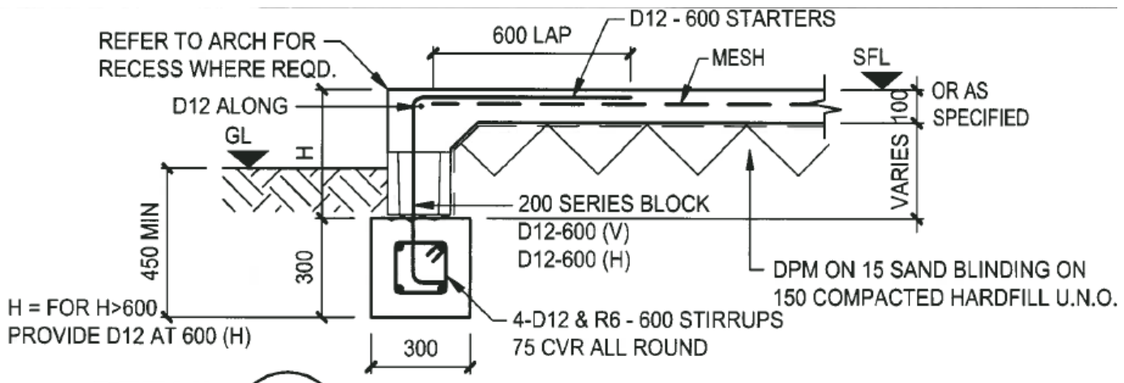

DETAIL TYP **A2.05** EDGE DETAIL 300x300
1:20

msc

design	date December 2013
drawn	scale 1:10@A3
checked JG	job no. 13-027

job title
McMEIKEN POOL HOUSE
107 HINEMOA STREET
BIRKENHEAD 0626

sheet title
CONSTRUCTION DETAILS

sheet no **A5.03** revision

PRINT : 19 March 2014

© Copyright to GA Ltd